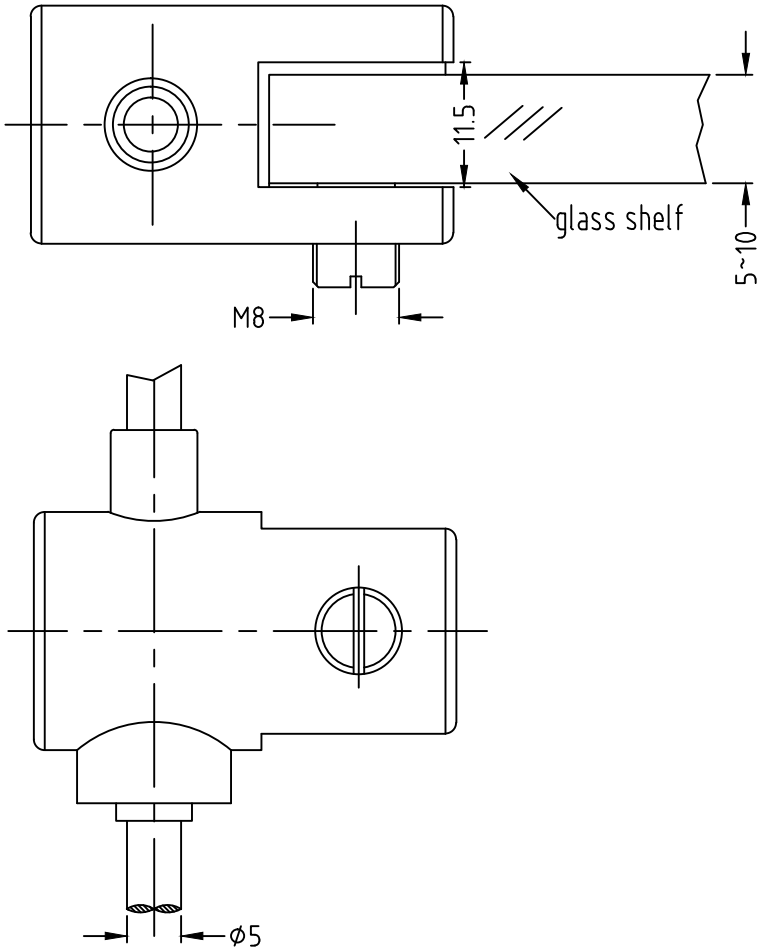

Richelieu

Ref.: BP124311175